Multicomp

ALL RIGHTS RESERVED. NO PORTION OF THIS PUBLICATION, WHETHER IN WHOLE OR IN PART CAN BE REPRODUCED WITHOUT THE EXPRESS WRITTEN CONSENT OF SPC TECHNOLOGY.

SPC-F005.DWG

REVISIONS

DOC. NO. SPC-F005 * Effective: 7/8/02 * DCP No: 1398

DCP #	REV	DESCRIPTION	DRAWN	DATE	CHECKD	DATE	APPRVD	DATE
2070	A	Released	JN	09-03-09	JWM	09-03-09	JWM	09-03-09

RoHS Compliant

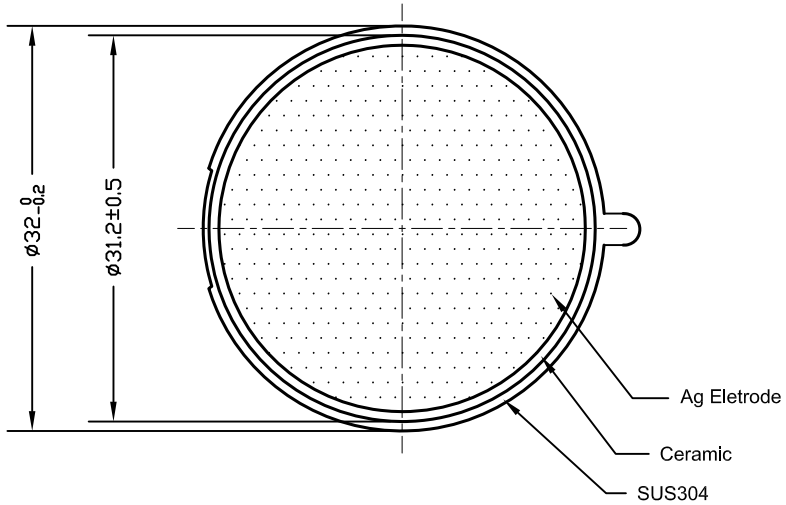

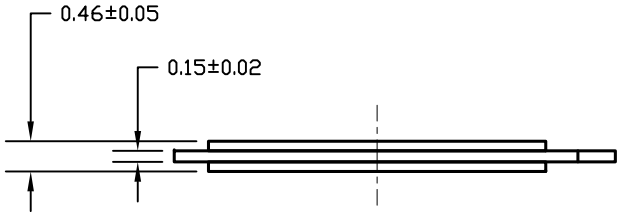

Specification

1. Resonant Frequency: 2.4±0.5 KHz
2. Resonant Resistance: 150Ω max.
3. Capacitance: 210000 pF±30% at 100Hz
4. Input Voltage: 30 Vp-p max
5. Operating Temperature: -20~+60°C
6. Storage Temperature: -20~+70°C

DISCLAIMER:
ALL STATEMENTS AND TECHNICAL INFORMATION CONTAINED HEREIN ARE BASED UPON INFORMATION AND/OR TESTS WE BELIEVE TO BE ACCURATE AND RELIABLE. SINCE CONDITIONS OF USE ARE BEYOND OUR CONTROL, THE USER SHALL DETERMINE THE SUITABILITY OF THE PRODUCT FOR THE INTENDED USE AND ASSUME ALL RISK AND LIABILITY WHATSOEVER IN CONNECTION THEREWITH.

TOLERANCES:
UNLESS OTHERWISE SPECIFIED, DIMENSIONS ARE FOR REFERENCE PURPOSES ONLY.

DRAWN BY:	DATE:
Jason Nash	09-03-09
CHECKED BY:	DATE:
Jason Nash	09-03-09
APPROVED BY:	DATE:
Jason Nash	09-03-09

DRAWING TITLE: Piezoelectric Diaphrogm

SIZE	DWG. NO.	ELECTRONIC FILE	REV
A	MCFT-32G-2.4AS -133	25R0582.dwg	A

SCALE: NTS | U.O.M.: INCHES [mm] | SHEET: 1 OF 1